SEASIDE

This drawing is for information only and must not be used for construction or fabrication, prior to final design.

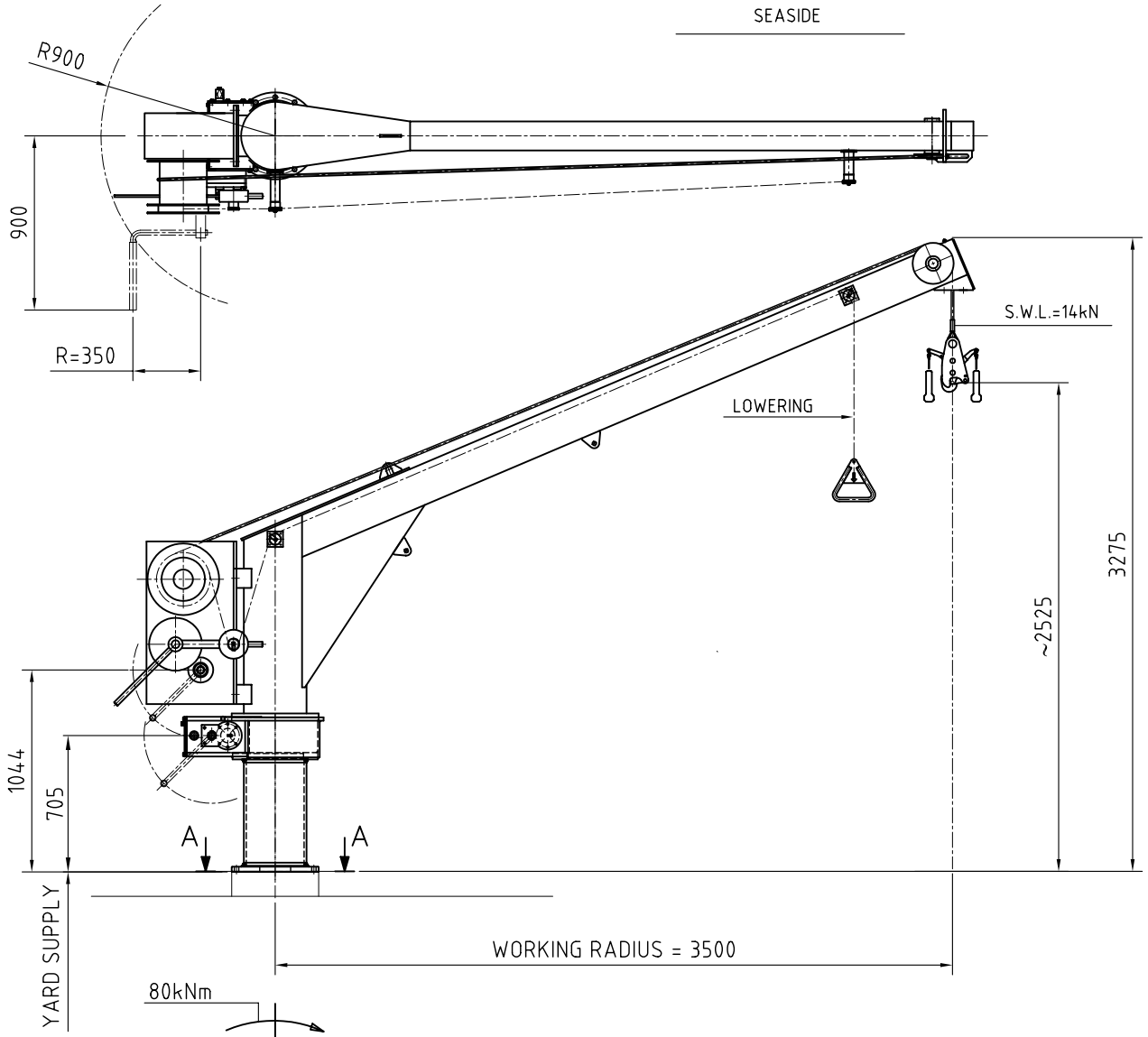

LIFTING HOOK AND PEDESTAL
HAVE TO BE ORDERED SEPERATELY

LEFT-HANDED EXECUTION HAS BEEN DRAWN
RIGHT-HANDED EXECUTION IS IN OPPOSITE HAND

EXECUTION OF DAVIT "R" OR "L"

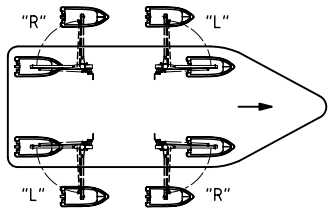

Approx. davit weight:
(without oil)
1280 Kg.

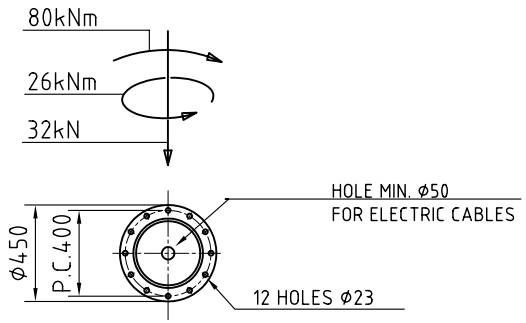

SECTION A-A

FOUNDATION CONNECTION PARTS

-12 BOLTS M20x80, QUALITY 10.9, DIN 931
-12 NUTS M20 QUALITY 10, DIN 934
-24 WASHERS Ø21, DIN 125A

PRESPAN MOMENT =620 Nm

POSNR.	QUANT.	DESCRIPTION	MATERIAL	REMARKS	WEIGHT

Rev.	Date	Description	Name
D	-	-	-
C	10.9.04	Update	RvB
B	5.9.03	remove raft	RvB
A	2.6.03	RAFT added	RvB

TITEL:
MANUAL SLEWING DAVIT "SCM 14-3.5 L"

NED-DECK MARINE
Survival Systems & Deck Equipment
Voltastraat 22
3771 RZ Barneveld
Tel.: (+31) 342-422105
Fax: (+31) 342-492717

This drawing is the property of NED-DECK MARINE B.V. and may not be reproduced or distributed to third parties without their specific written consent

DRAWN.: RvB
DATE: 31-03-'03
APPROVED.: -
SCALE: 1:25

TOLERANCES
NEN-ISO 2768-1

PROJECTION

DRAWING NUMBER: A-100667
SIZE: A3
REVISION: C