Scale 1:100

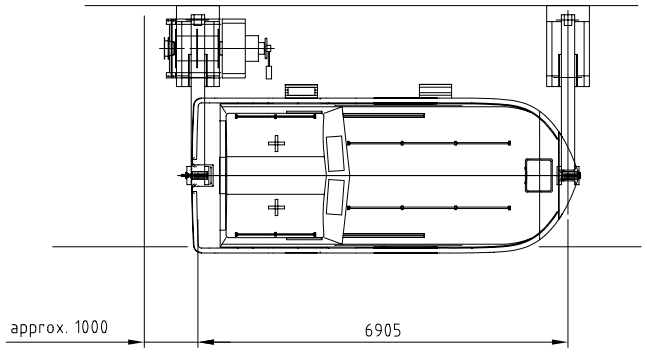

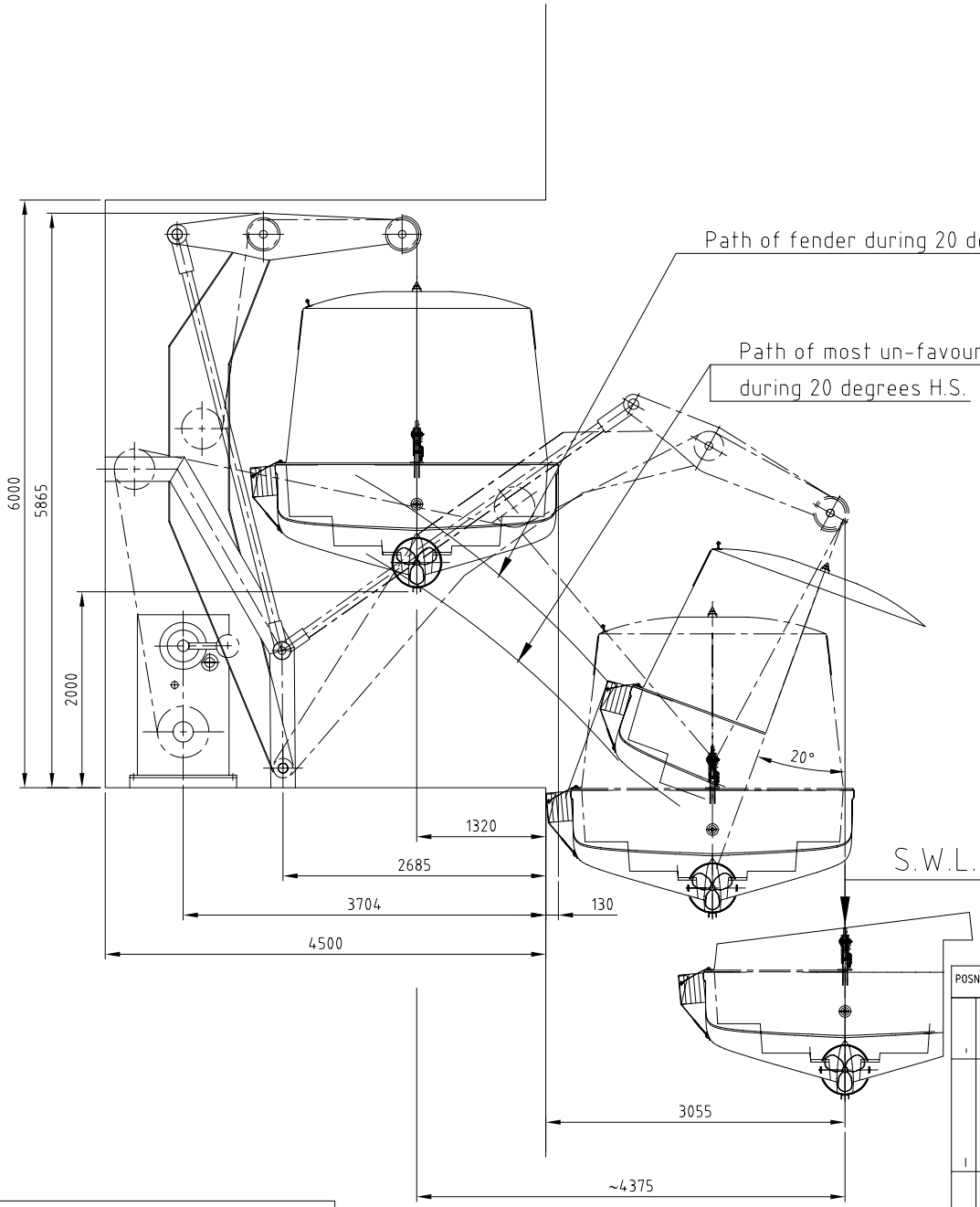

S.W.L. per arm = 37.5 kN

Wiring diagram

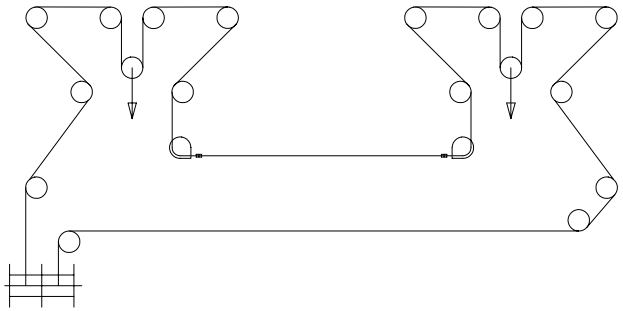

This drawing is for information only and must not be used for construction or fabrication, prior to final design.

POSNR.	QUANT.	DESCRIPTION	MATERIAL	REMARKS	WEIGHT

TITEL: MULTI -PIVOTING GRAVITY DAVIT "LPLG 75"

Rev.	Date	Description	Name
D	-	-	-
C	-	-	-
B	-	-	-
A	-	-	-

NED-DECK MARINE
Survival Systems & Deck Equipment
Voltastraat 22
3771 RZ Barneveld
Tel.: (+31) 342-422105
Fax: (+31) 342-492717

This drawing is the property of NED-DECK MARINE B.V. and may not be reproduced or distributed to third parties without their specific written consent

DRAWN.:	RvB
DATE:	20-09-'04
APPROVED.:	-
SCALE:	1:50
TOLERANCES	NEN-ISO 2768-1
PROJECTION	
DRAWING NUMBER	A-101134
SIZE	A3
REVISION	-