This drawing is for information only and must not be used for construction or fabrication, prior to final design.

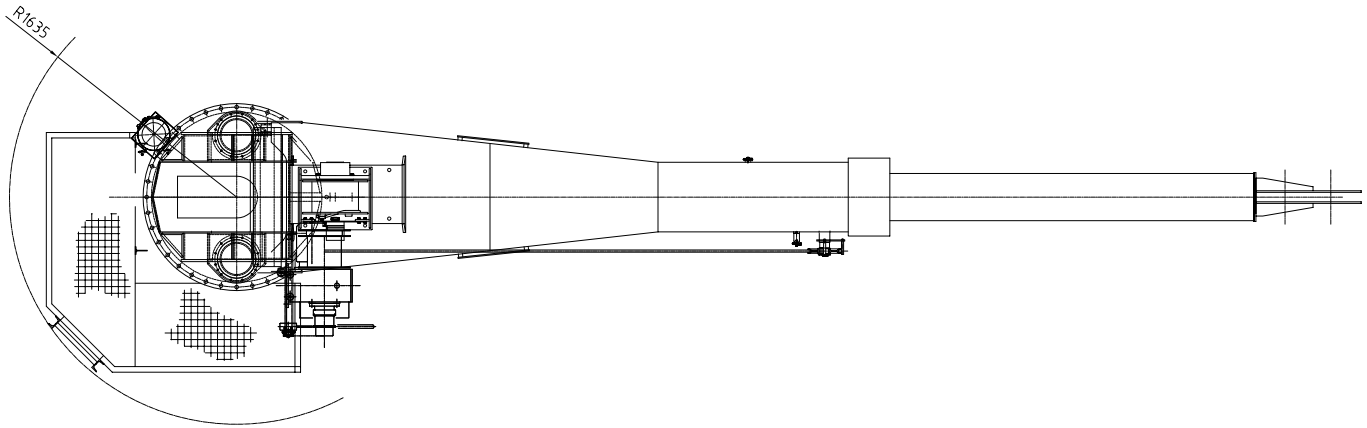

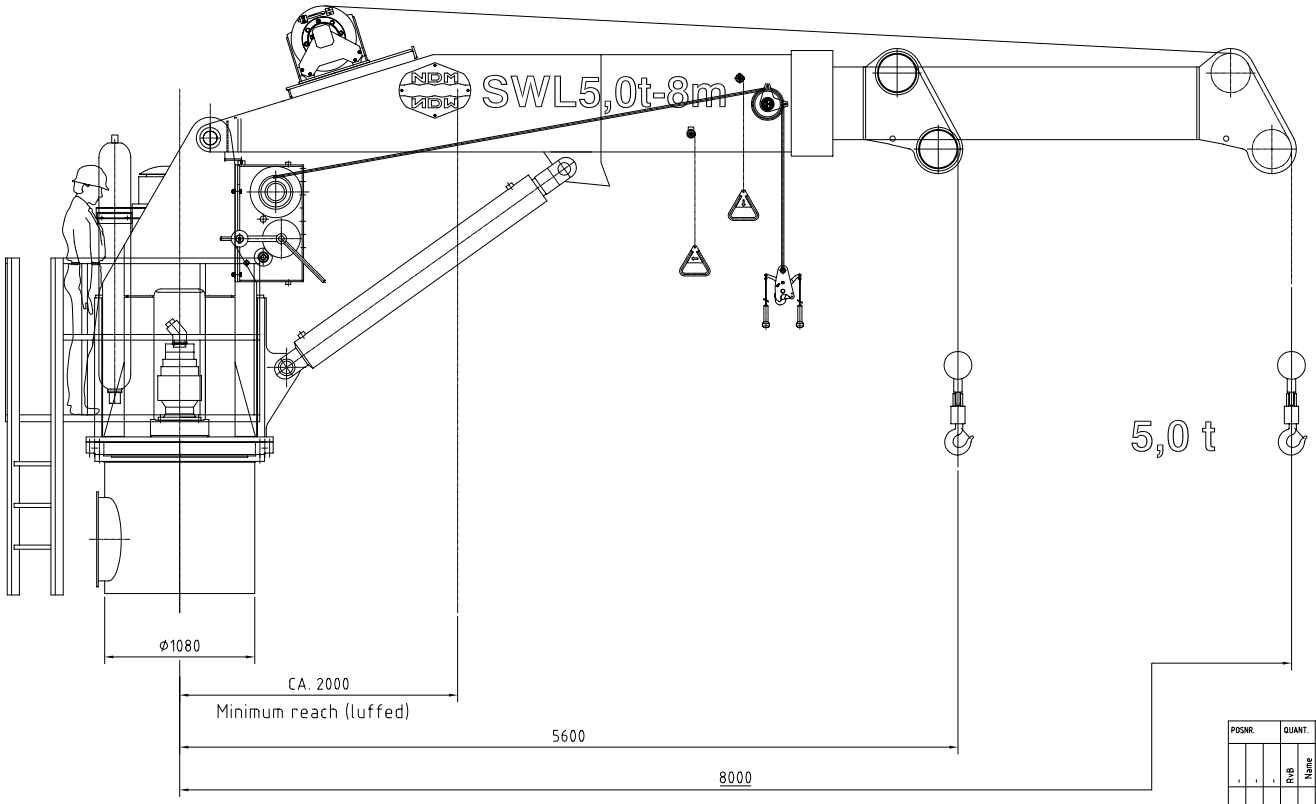

POSNR.	QUANT.	DESCRIPTION	MATERIAL	REMARKS	WEIGHT

TITEL: Hydr.luff.-slew.&telescoping crane "SCTT 50-8.0"

Rev	Date	Description	Name
A	17.9.04	Update	RvB
B	-	-	-
C	-	-	-
D	-	-	-

NED-DECK MARINE
Survival Systems & Deck Equipment
Voltastraat 22
3771 RZ Barneveld
Tel.: (+31) 342-422105
Fax: (+31) 342-492717

This drawing is the property of NED-DECK MARINE B.V. and may not be reproduced or distributed to third parties without their specific written consent

DRAWN:	RvB
DATE:	04-03-'03
APPROVED:	-
SCALE:	1:25
TOLERANCES	NEN-ISO 2768-1
PROJECTION	
DRAWING NUMBER	A-100650
SIZE	A2
REVISION	A