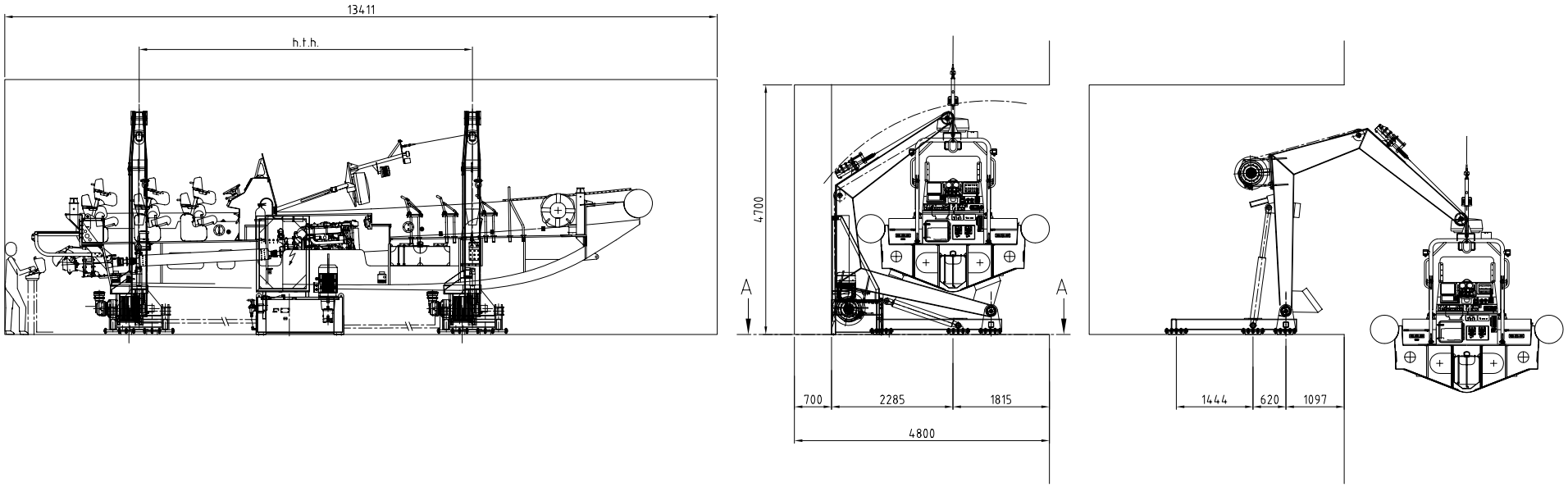

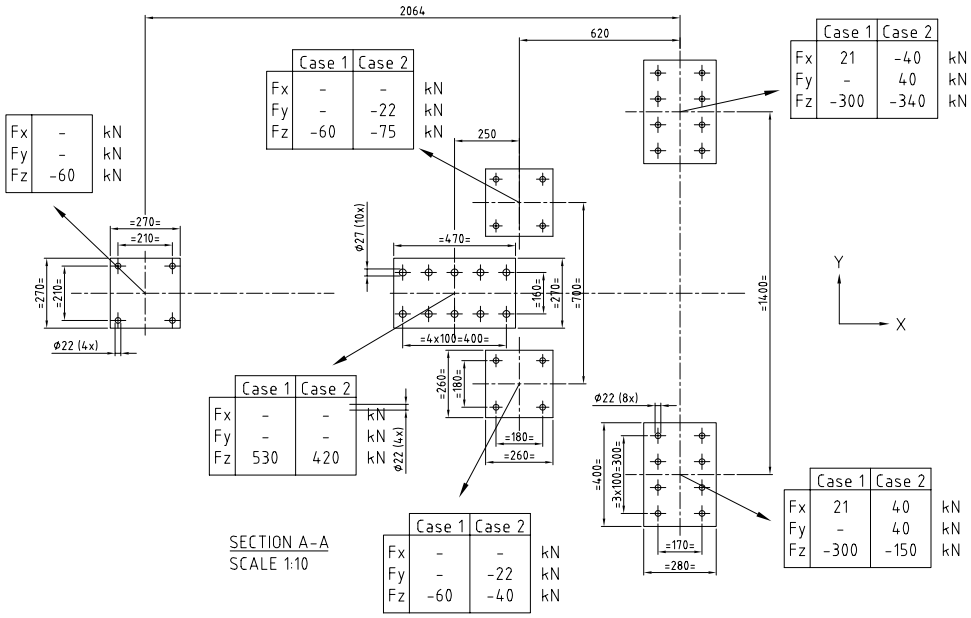

Fx	-	kN
Fy	-	kN
Fz	-60	kN

	Case 1	Case 2	
Fx	-	-	kN
Fy	-	-22	kN
Fz	-60	-75	kN

	Case 1	Case 2	
Fx	21	-40	kN
Fy	-	40	kN
Fz	-300	-340	kN

	Case 1	Case 2	
Fx	-	-	kN
Fy	-	-	kN
Fz	530	420	kN

	Case 1	Case 2	
Fx	-	-	kN
Fy	-	-22	kN
Fz	-60	-40	kN

	Case 1	Case 2	
Fx	21	40	kN
Fy	-	40	kN
Fz	-300	-150	kN

SECTION A-A
SCALE 1:10

GENERAL DATA

SWL	:	10 t
Load to arms		
- Front	:	6,8 t
- Aft	:	3,2 t
Speeds:		
- Recovery	:	20 m/min
- CT	:	120 m/min
List/ Trim	:	5° / 2°
Seastate	:	Hsign = 3,1 m
Windspeed	:	Vwind = 19 m/sec (Bft 5)
Applicable rule	:	ABS / API

FOUNDATION LOADS

CASE 1 : OFFLEAD
CASE 2 : SIDELEAD

- Loads for case 2 are with sidelead in +Y direction
  If sidelead is in -Y direction, the loadsituation is in mirror

FOR INFO ONLY

TOTAL MASS: app. 8500 kG

This drawing is for information only and must not be used for construction or fabrication, prior to final design.

Rev	Date	Description	Name
D	.	.	.
C	.	.	.
B	.	.	.
A	.	.	.

TITEL: ARR. & DECKFOUNDATIONS "PFH 100-CT"

NDM / NDW
NED-DECK MARINE
Survival Systems & Deck Equipment
Hoofdstraat 22
3771 KC Barneveld
Tel.: (+31) 342-422165
Fax: (+31) 342-492117

DRAWN: RvB
DATE: 31-01-'07
APPROVED: -
SCALE: 1:50
TOLERANCES: NEN-ISO 2768-1
PROJECTION:
DRAWING NUMBER: A-101891
SIZE: A1
REVISION: -

This drawing is the property of NED-DECK MARINE B.V. and may not be reproduced or distributed to third parties without their specific written consent