This drawing is for information only and must not be used for construction or fabrication, prior to final design.

MAX. WIREROPE DIAM.: Ø14
DRUM CAPACITY: 22 MTR.+3 LAYERS

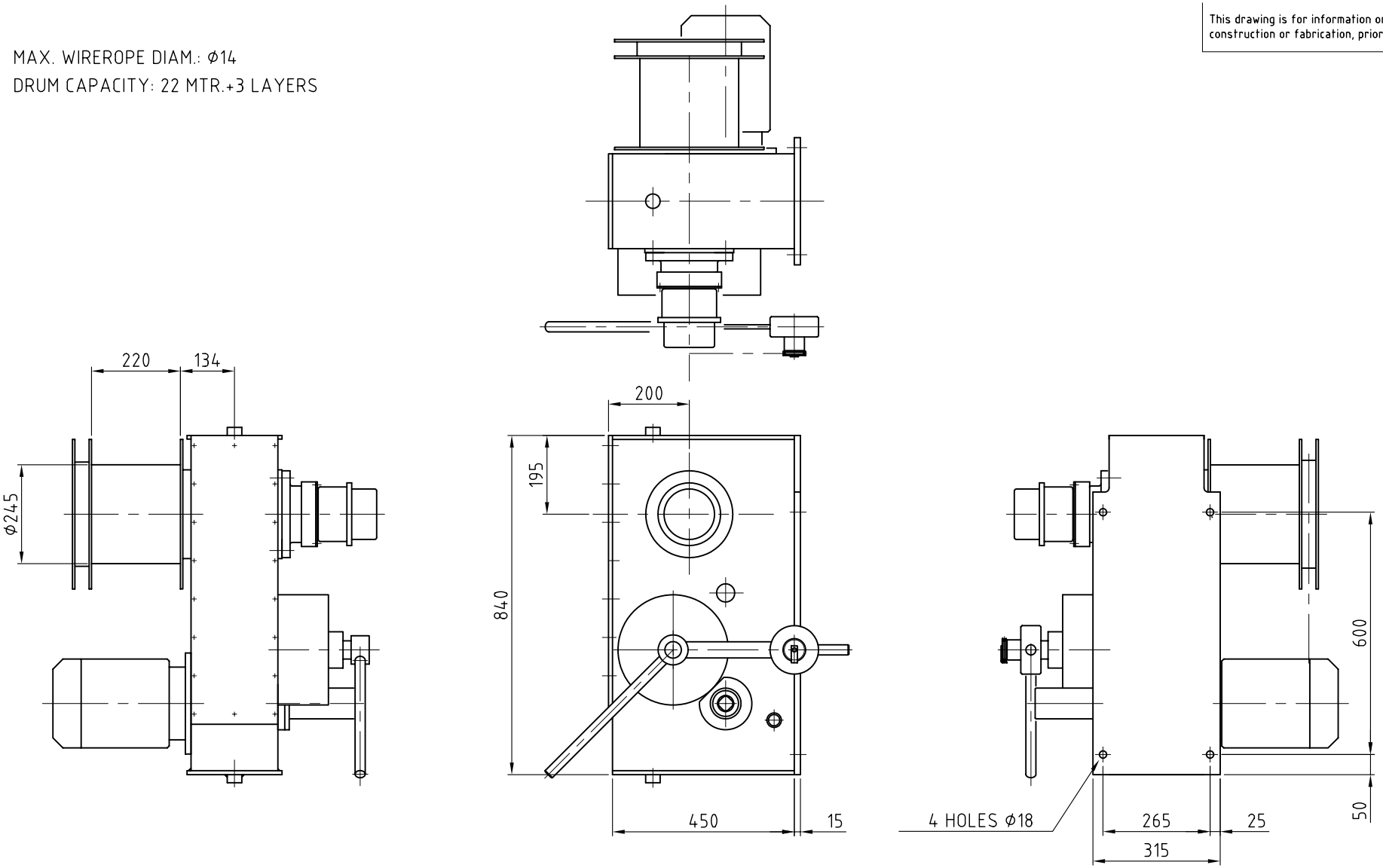

LEFT HANDED WINCH HAS BEEN DRAWN
RIGHT HANDED WINCH IS IN OPPOSITE HAND

POSNR.	QUANT.	DESCRIPTION	MATERIAL	REMARKS	WEIGHT

Rev.	Date	Description	Name
D	-	-	-
C	17.9.04	Update	RvB
B	-	Brake lever	RvB
A	-	Winch Type	RdR

TITEL:
ARRANGEMENT WINCH "TYPE 04-ES"

NED-DECK MARINE
Survival Systems & Deck Equipment

Voltastraat 22
3771 RZ Barneveld
Tel.: (+31) 342-422105
Fax: (+31) 342-492717

This drawing is the property of NED-DECK MARINE B.V. and may not be reproduced or distributed to third parties without their specific written consent

DRAWN.: DG
DATE: 06-06-'97
APPROVED.: -
SCALE: 1:10

TOLERANCES: NEN-ISO 2768-1
PROJECTION

DRAWING NUMBER: L-100161
SIZE: A3
REVISION: C